ARTE LAMP

ASSEMBLY INSTRUCTION

A
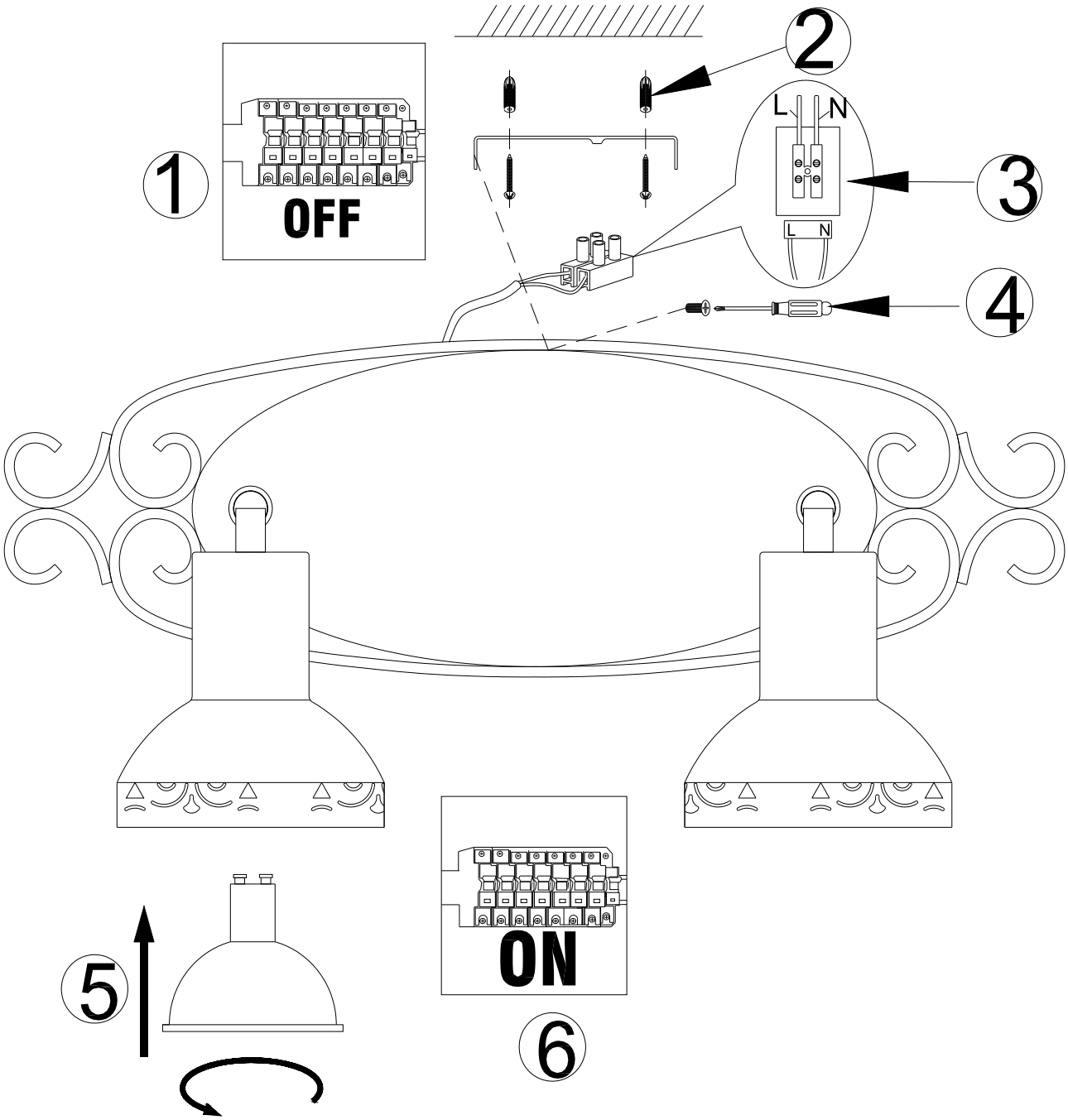
ИНСТРУКЦИЯ A5219AP-2BR(WG)