ARTE LAMP

ASSEMBLY INSTRUCTION

ИНСТРУКЦИЯ A1044FN-1BG
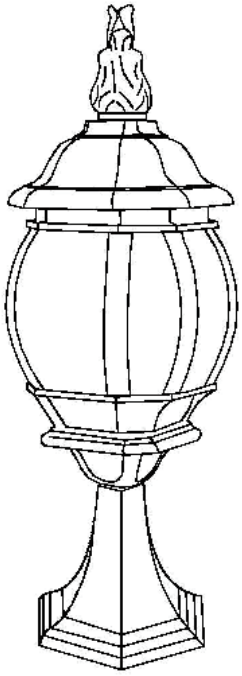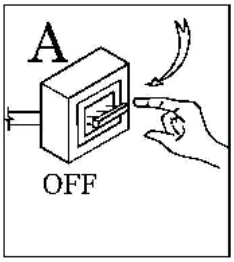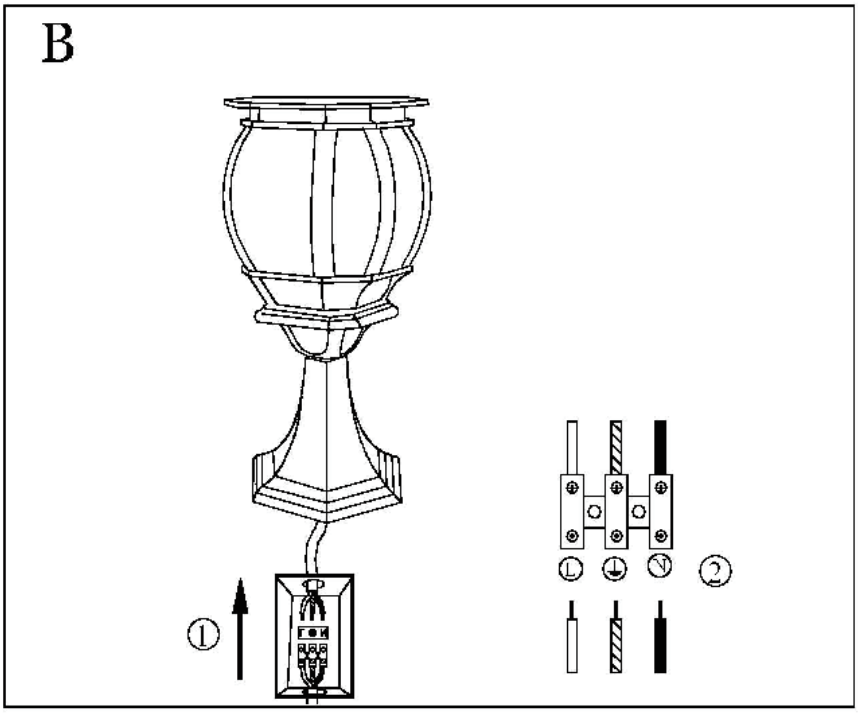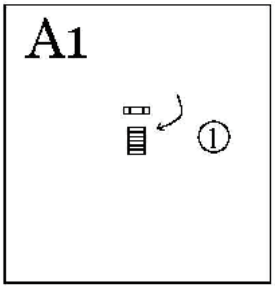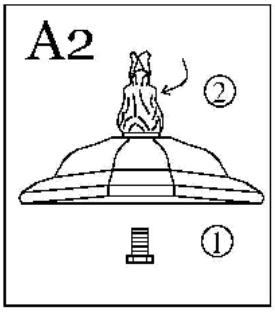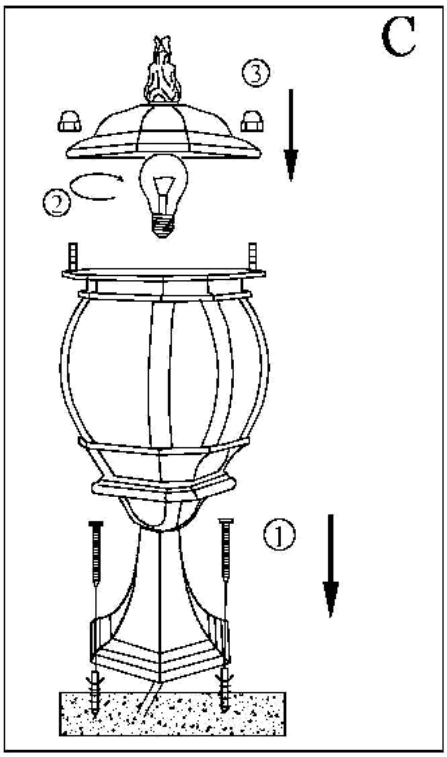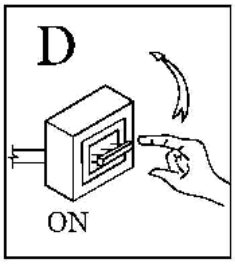
A