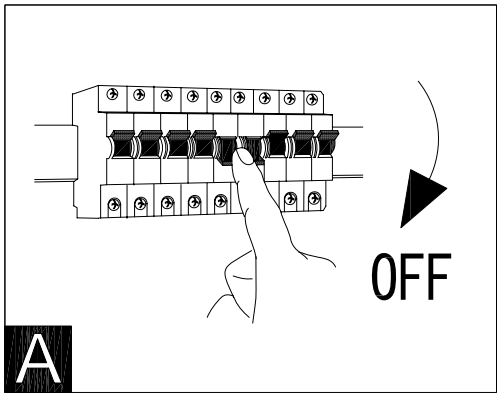
OFF
A

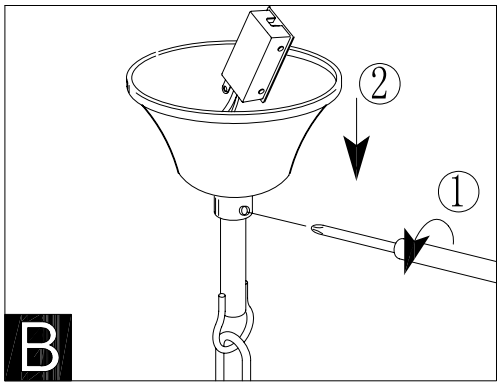
2
1
B

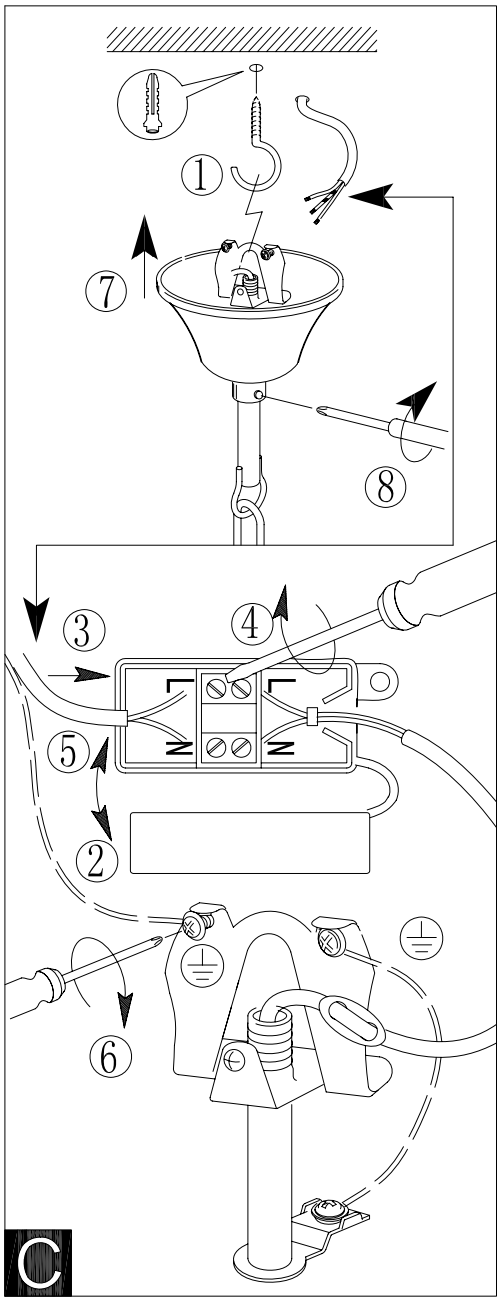
1
7
8
3
4
5
2
6
C

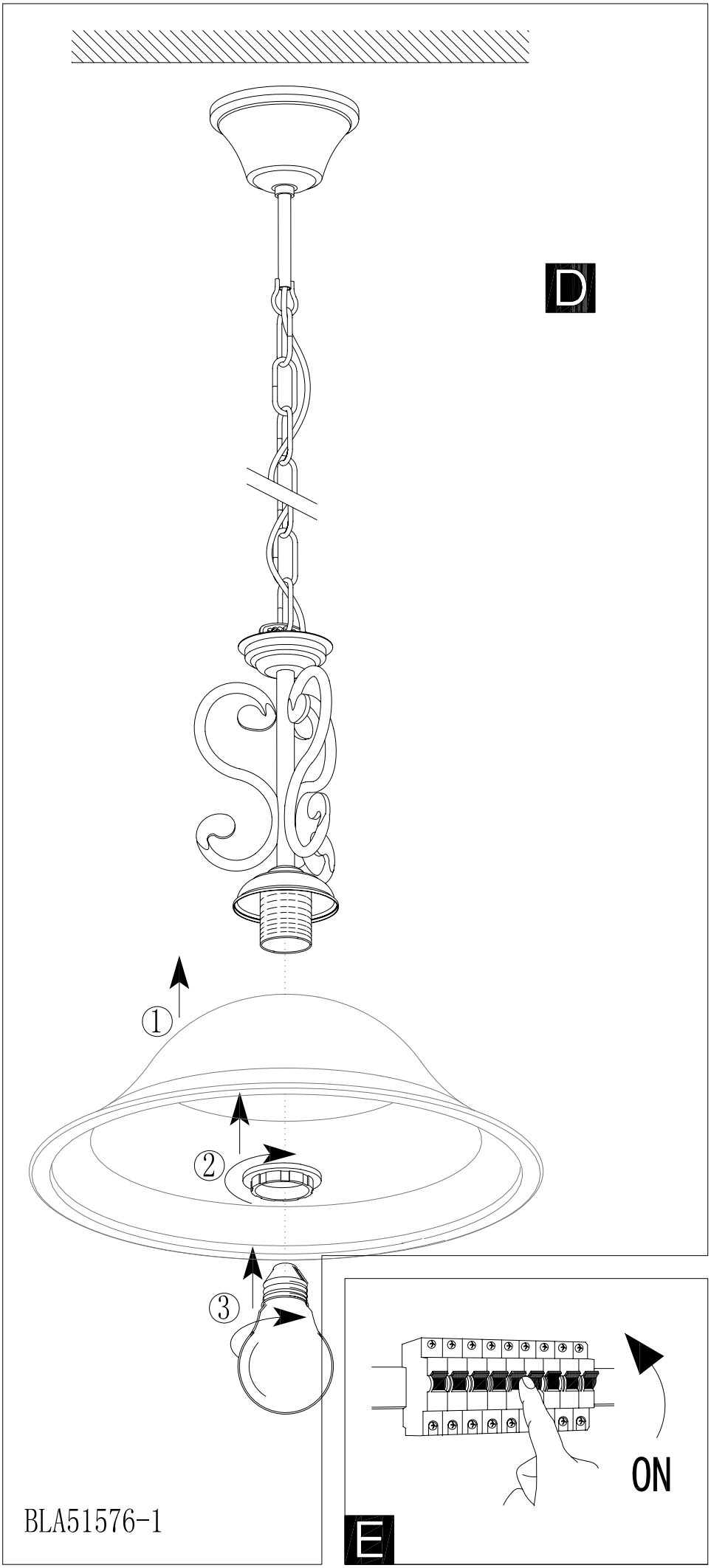
D
1
2
3
BLA51576-1
ON
E