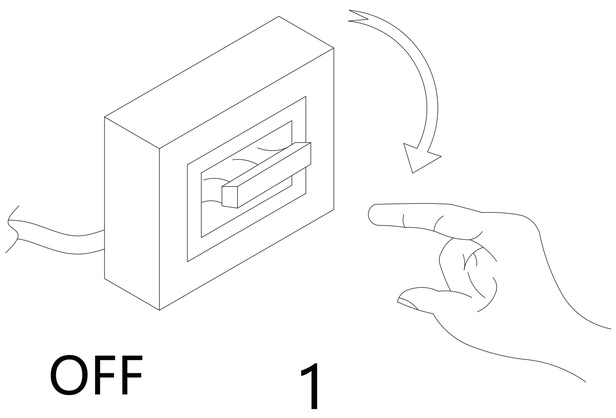
OFF
1

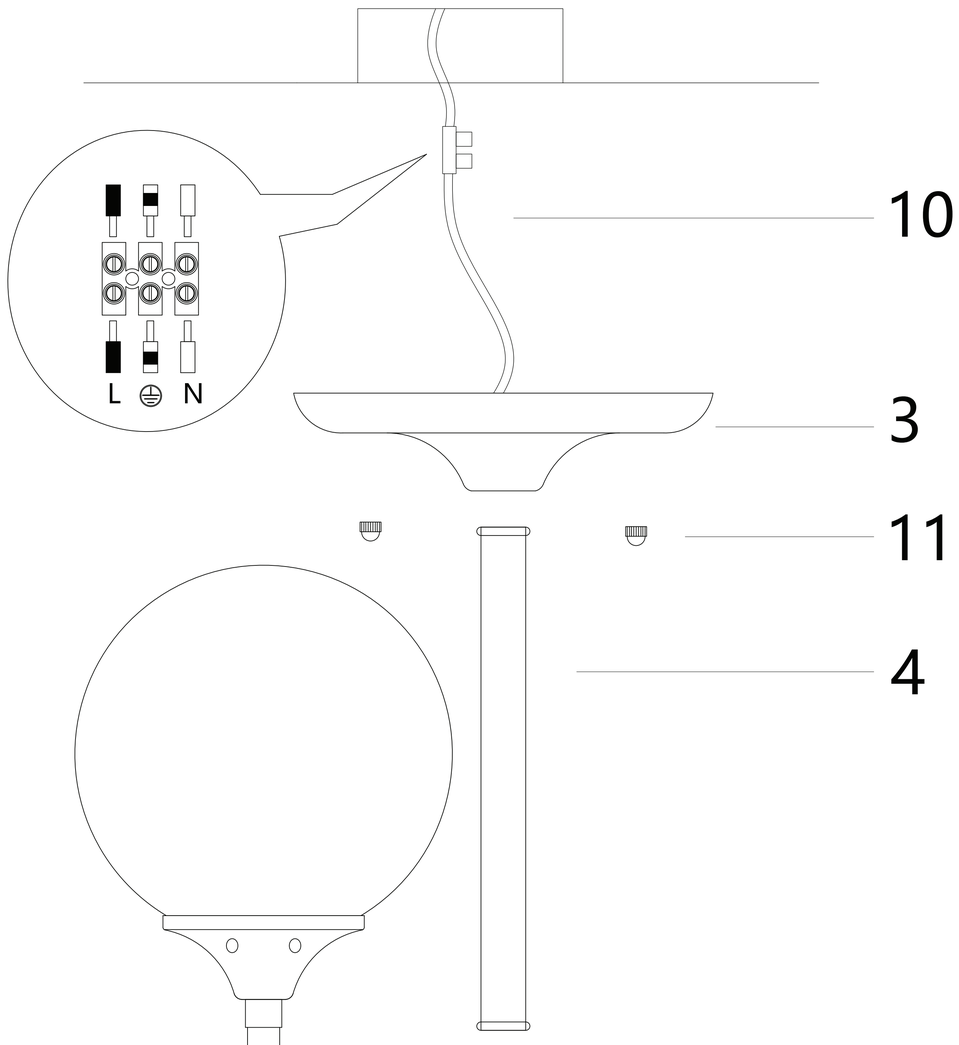
L
N
10
3
11
4

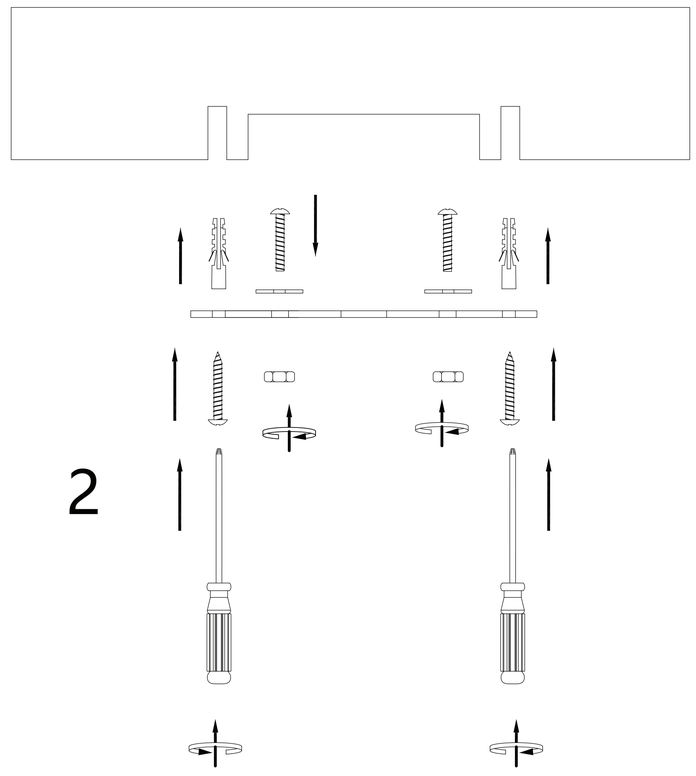
2

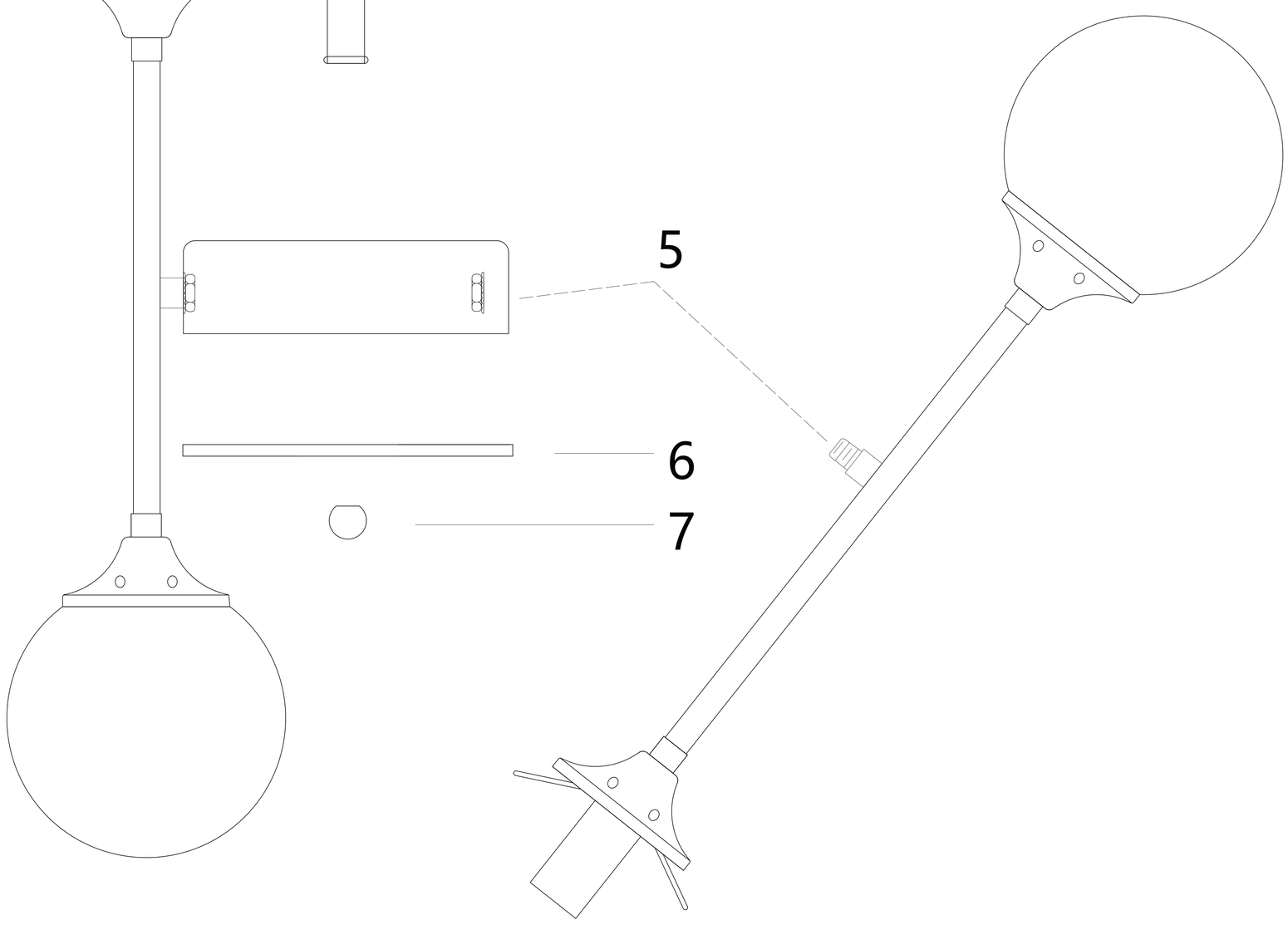
5
6
7

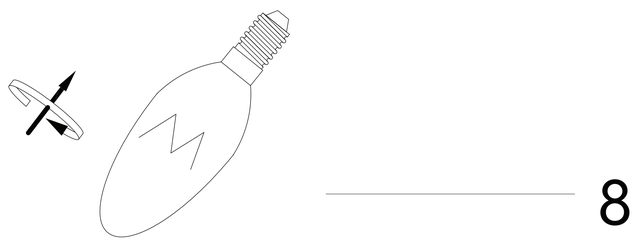
8

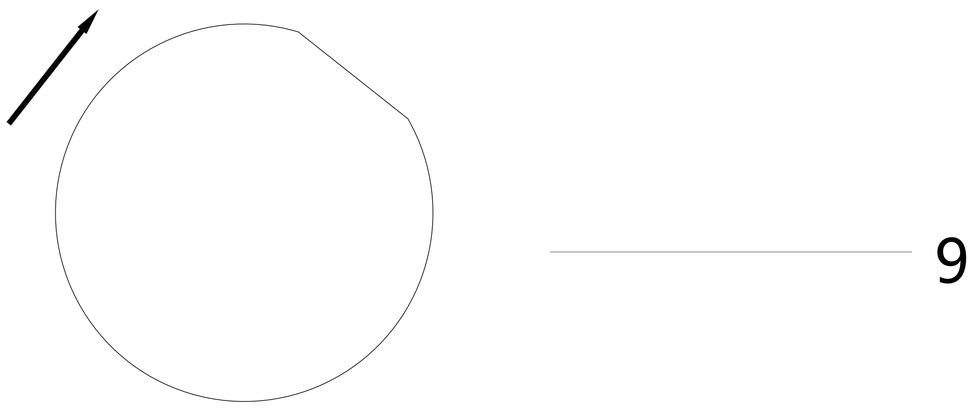
9

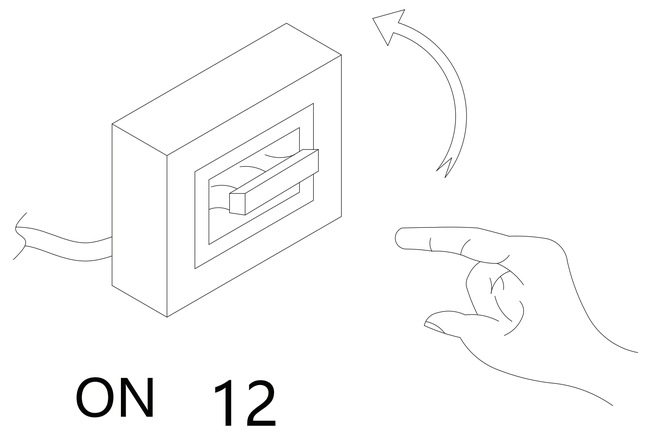
ON
12