ARTE LAMP

ASSEMBLY INSTRUCTION

A1221PL-3AB

ИНСТРУКЦИЯ

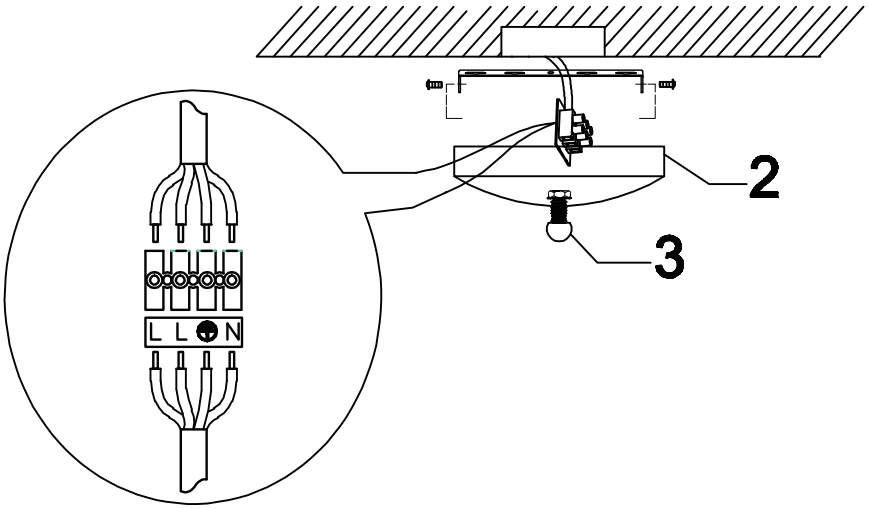

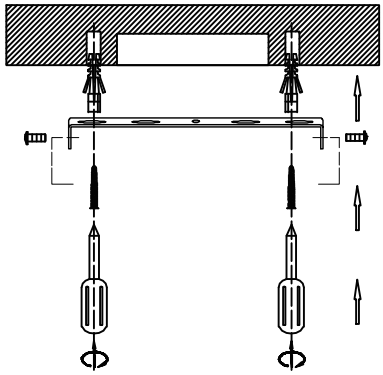

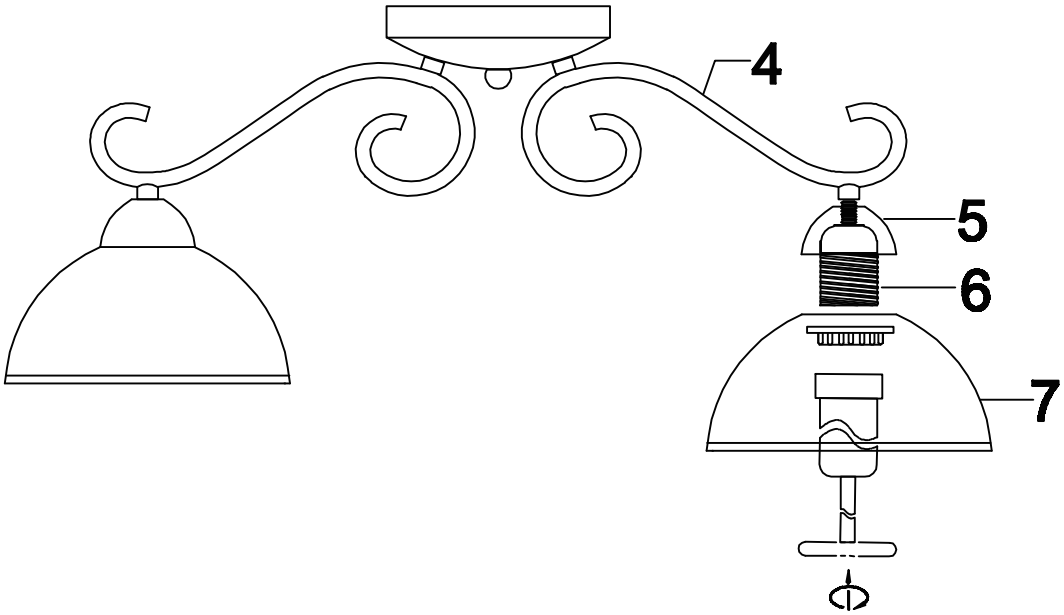

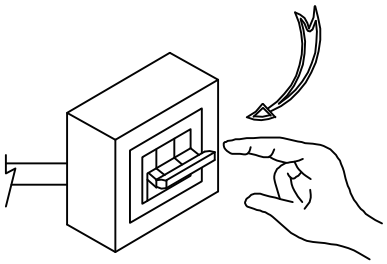

OFF 1

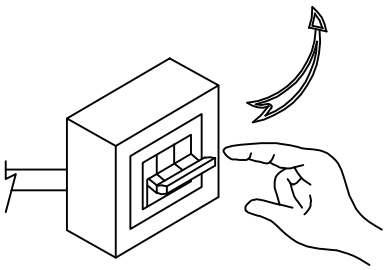

ON 8