ARTE LAMP

ASSEMBLY INSTRUCTION

A4290SP-7BK

ИНСТРУКЦИЯ

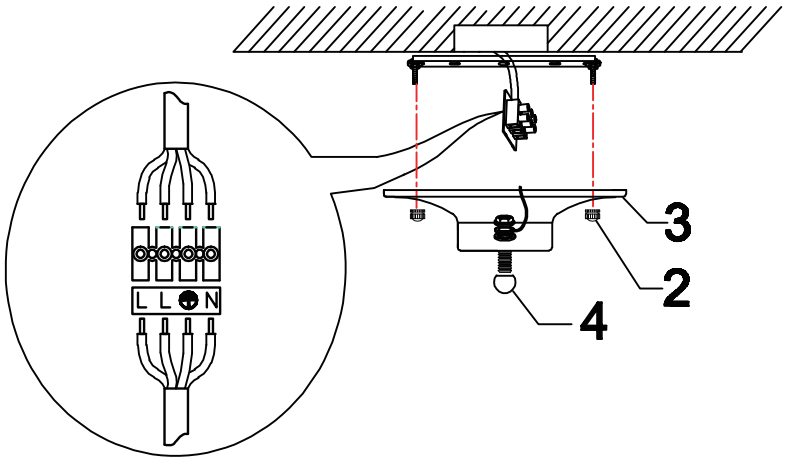

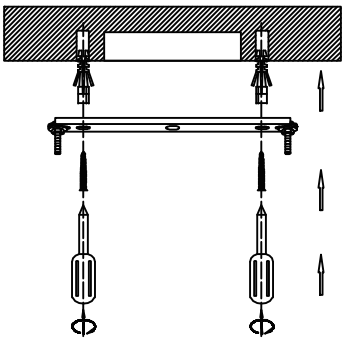

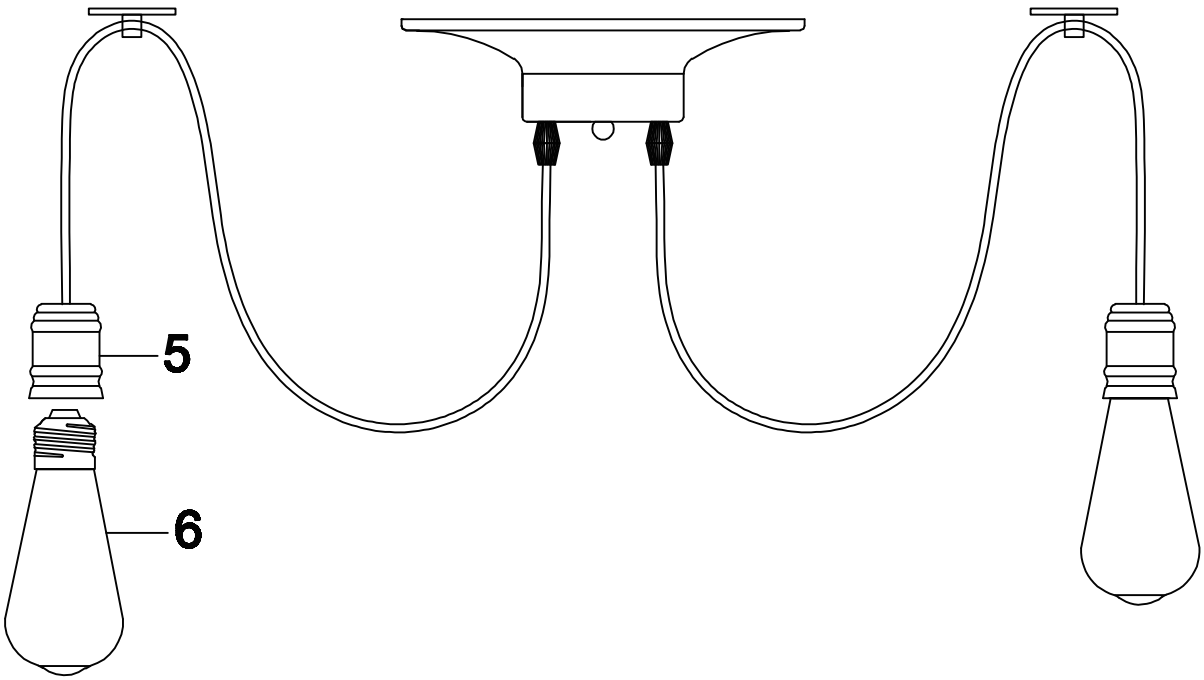

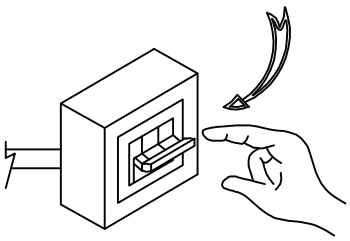

OFF 1

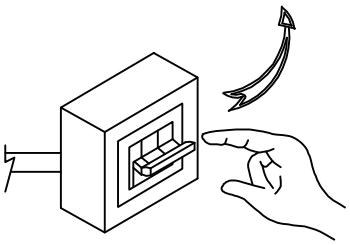

ON 8