ARTE LAMP

ASSEMBLY INSTRUCTION

A3479PL-5CC

# ИНСТРУКЦИЯ

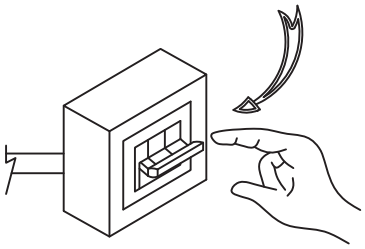

OFF 1

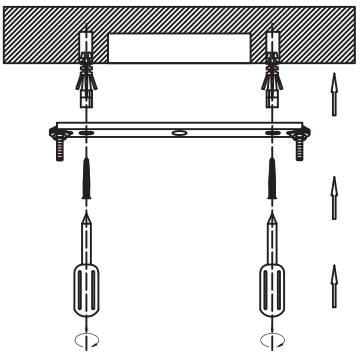

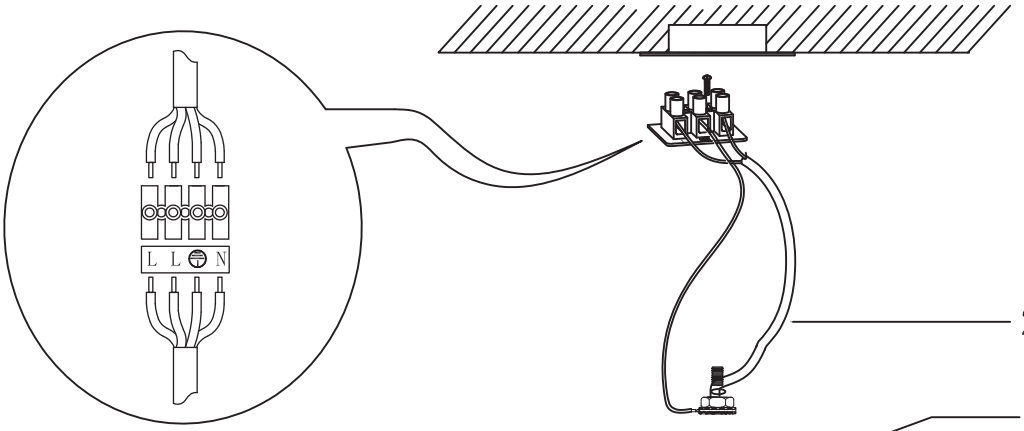


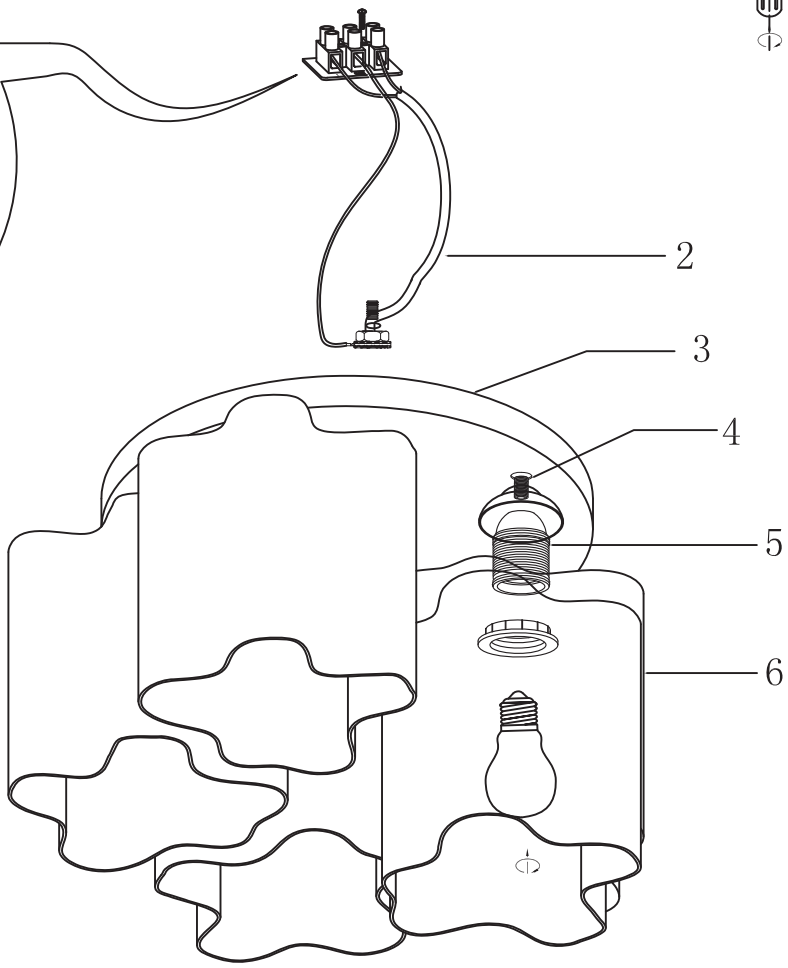


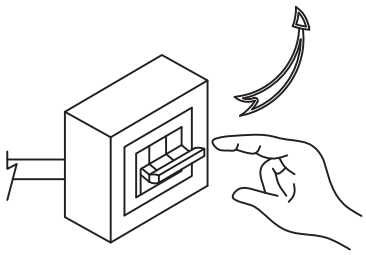

ON 7