ARTE LAMP

ASSEMBLY INSTRUCTION

A3236SP-1WH
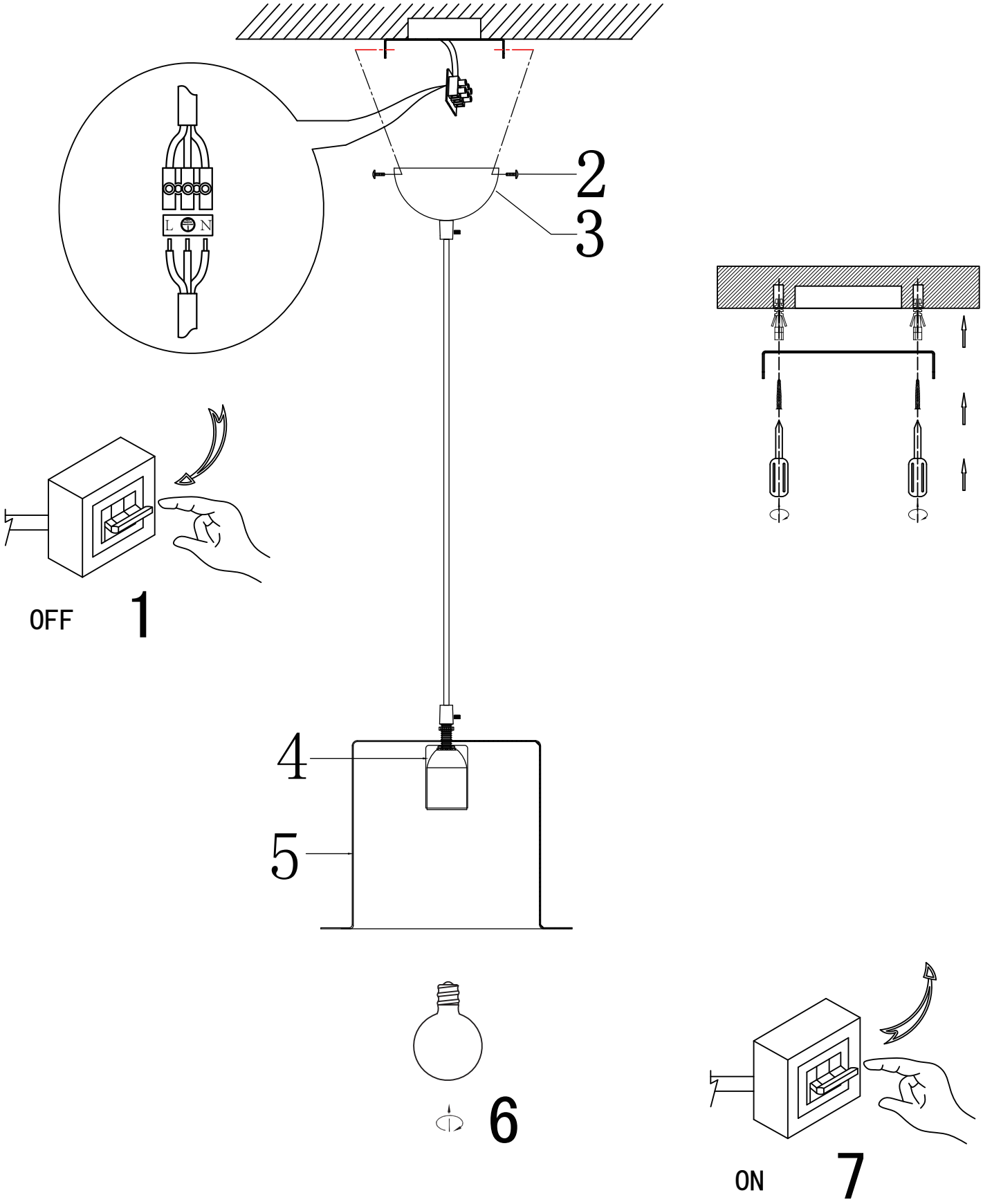
ИНСТРУКЦИЯ