ARTE LAMP

ASSEMBLY INSTRUCTION

ИНСТРУКЦИЯ
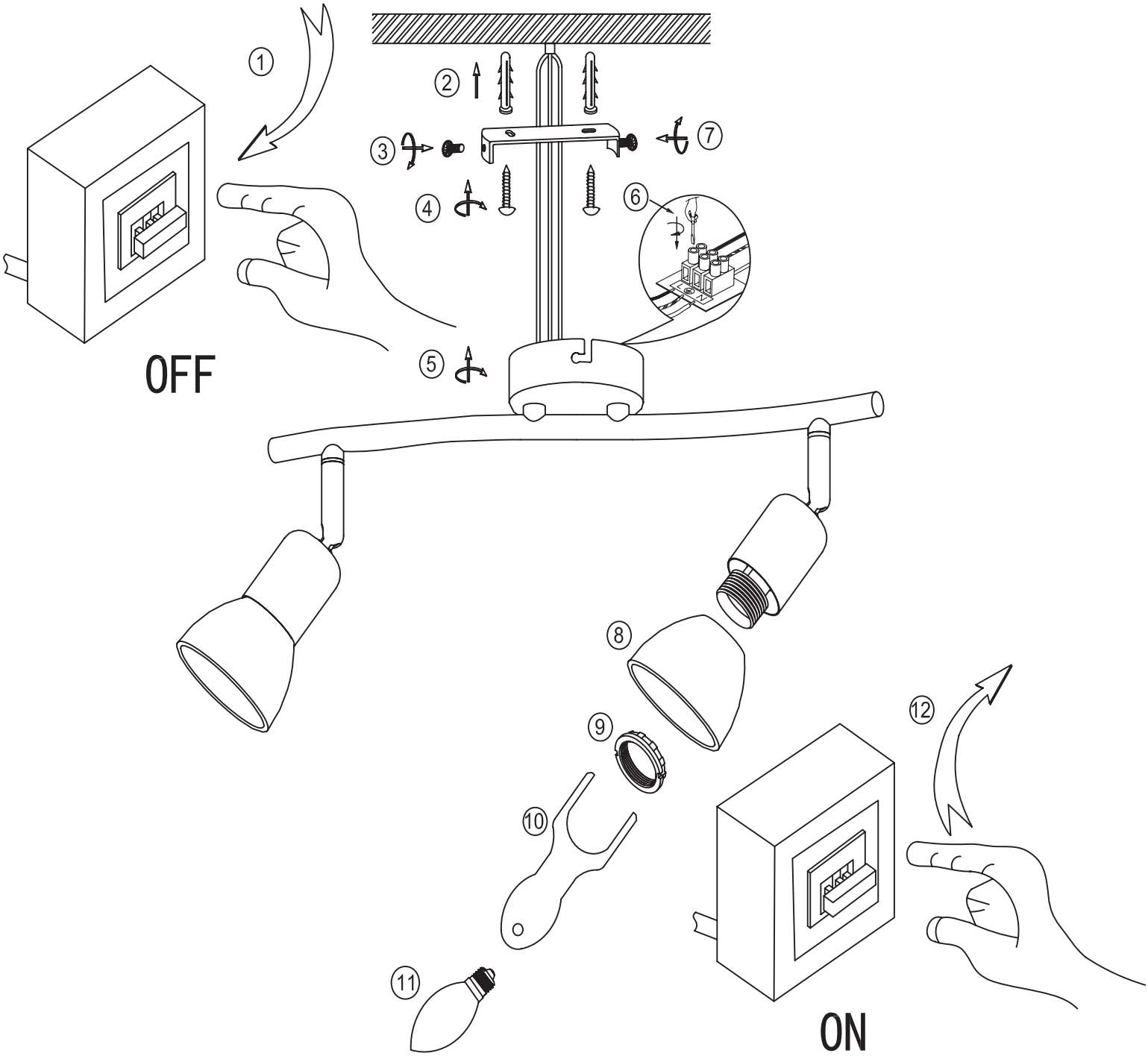
A3115PL-2SS