ARTE LAMP

ASSEMBLY INSTRUCTION

ИНСТРУКЦИЯ

A
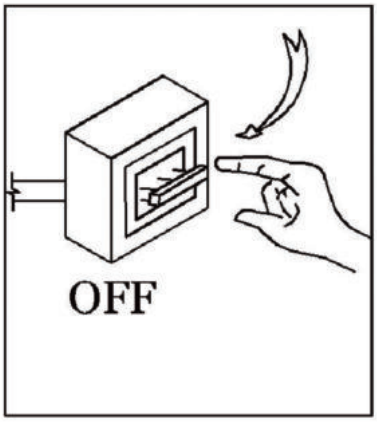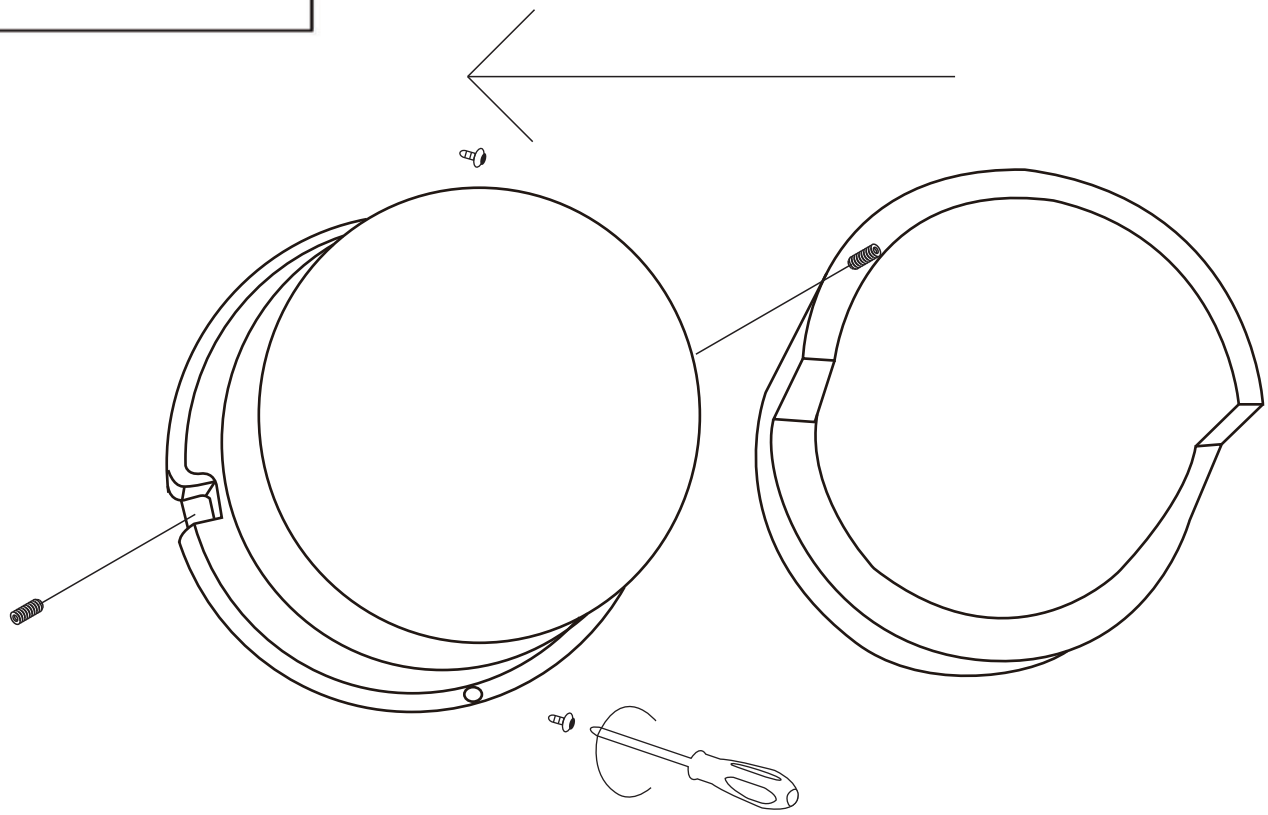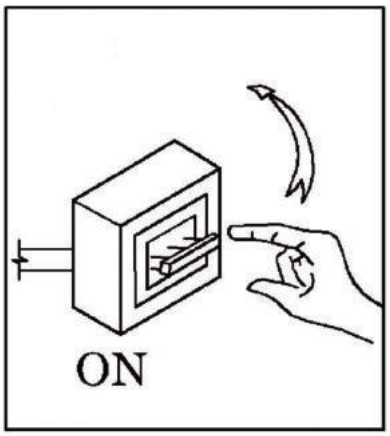
A8159AL-1WH
A8159AL-1WGY