ARTE LAMP

ASSEMBLY INSTRUCTION

A1292AP-1AB

ИНСТРУКЦИЯ

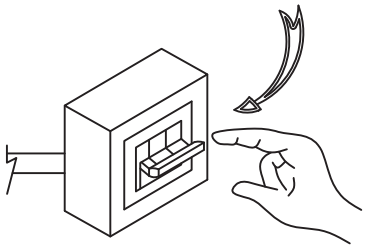

OFF 1

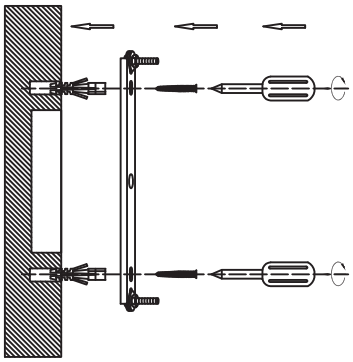

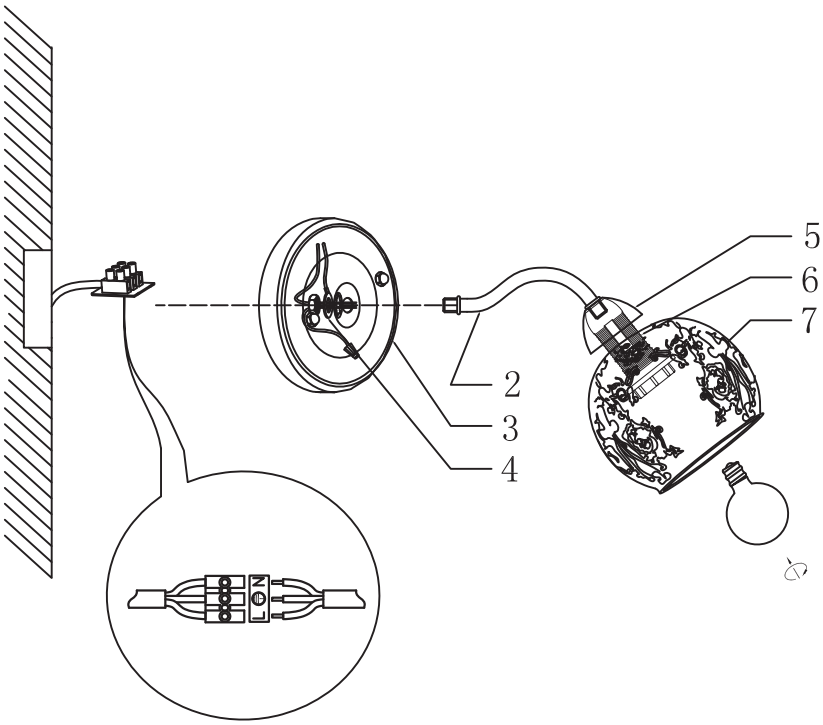

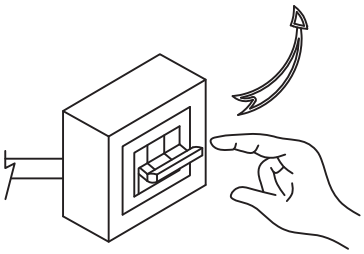

ON 8